Connecting a pre-Amp to the Audio Mojo

1) Introduction

The Quickfilter Audio Mojo demonstration board provides a means for the user to quickly and easily design a filter and test its effectiveness on a target audio stream. In electrical testing, the impact of the filters can be judged by measuring the filtered response using equipment such as the Audio Precision 2700. For actual listening tests, however, testing is more complex as it becomes more subjective. One of the areas of subjectivity is volume level. Variations in volume often occur because of the differences in expected levels on the inputs and outputs of audio devices. To adjust for these varying expectations, it becomes important match the Audio Mojo input and output levels to those of the audio source and audio receiver so that each device receives the signal level it is expecting. The Audio Mojo is designed to accept 1Vrms line level inputs and will output 1Vrms as its line level. Variations in these levels will have a direct impact on the volume heard at the audio receiver. A method to overcome the mismatches is to use an audio pre-amp on the inputs and outputs of the Audio Mojo to assure it receives 1Vrms and that it can deliver whatever the audio receiver requires as a line level. This application note describes how to connect and set up the pre-Amp for this purpose.

2) Equipment Needed

1. Audio Source (This can be a CD player, MP3 Player, Computer, etc.)
2. Pre-Amplifier (this application note uses a Behringer Mini-Amp 800, however, any similar pre-amp will suffice)
3. Audio Mojo
4. Audio Receiver (this can be a TV, Docking Station, Headphone, etc.
5. Cables (one end compatible with the pre-Amp and one end RCA for the Audio Mojo)

3) Block diagram

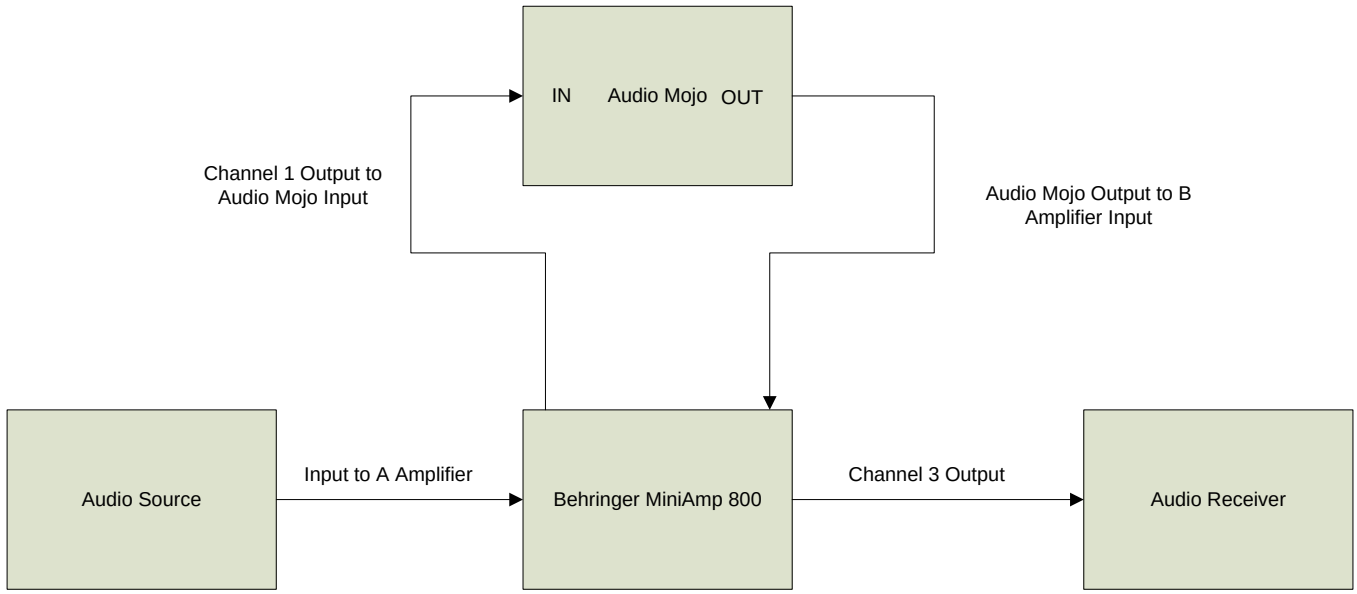

4) Equipment Setup and Instructions

Figure A shows the amplifier used for this application note. It is a Behringer Mini-Amp model 800. This amplifier was chosen primarily for its size and cost. Any amplifier with similar features may be used in its stead. The setup described below may differ, however, due to changes in nomenclature and connector types.

Figure A. Behringer Mini-Amp Model 800

Step 1

Connect the output of the audio source to the A amplifier input of the Behringer (Figure 1). The Behringer connections are ¼ inch mono connections. The user will need a cable for left and right channels.

Figure 1. Connect input signal into A amplifier input as shown

Step 2

Connect the output of channel 1 on the Behringer to the Audio Mojo input connectors (Figure 2). This output connection uses a stereo ¼ inch cable for the Channel 1 connection on the Behringer and RCA jacks on the other end for the Audio Mojo input.

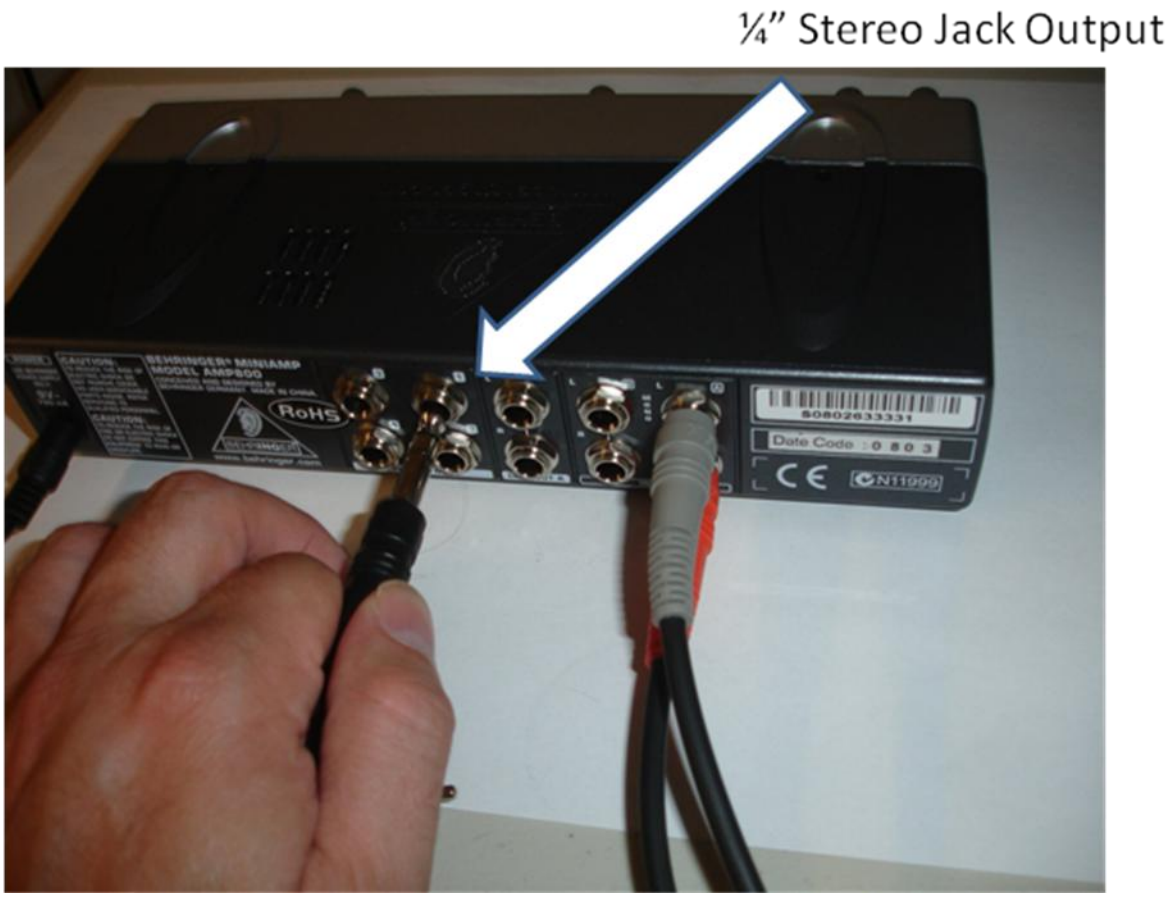

Figure 2 Connect Channel 1 output signal to input of Audio Mojo

Step 3 – See Figure 3

While playing an audio file, set the gain on the inputs of Amplifier A and Amplifer B to their maximum value. Ignore the LED readouts except when they show clipping (red).

On the front of the Behringer, use the push buttons to set Channel 1 for Input A and Channel 3 for Input B. Ignore the LEDs and input settings for Channels 2 and 4.

Adjust the gain for the Channel 1 output (Audio Mojo Input). 1 Vrms will have the -12dB LED on solid and the -6dB LED blinking infrequently. 2 Vrms will have the -6dB LED on solid and 0dB LED blinking infrequently.

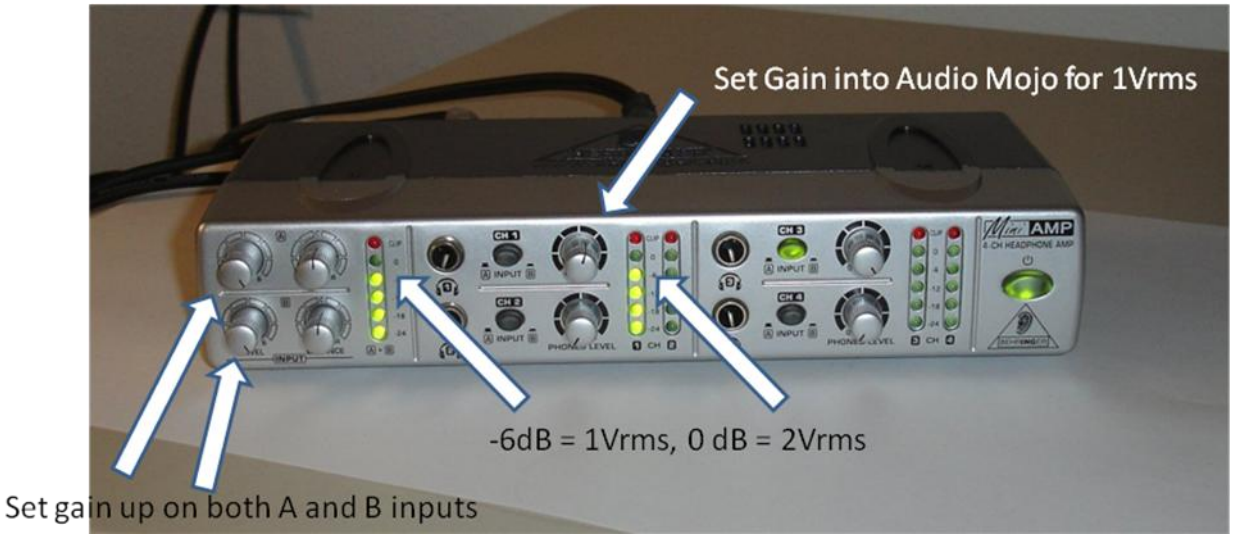

Figure 3 – Setting up the Input gain

Step 4 – See Figure 4

Connect the output of the Audio Mojo to the B Amplifier input of the pre-Amp. Cabling is the same as what is used in Step 1.

Figure 4

Step 5

Connect stereo output from Channel 3 amp to the audio receiving device (See Figure 5)

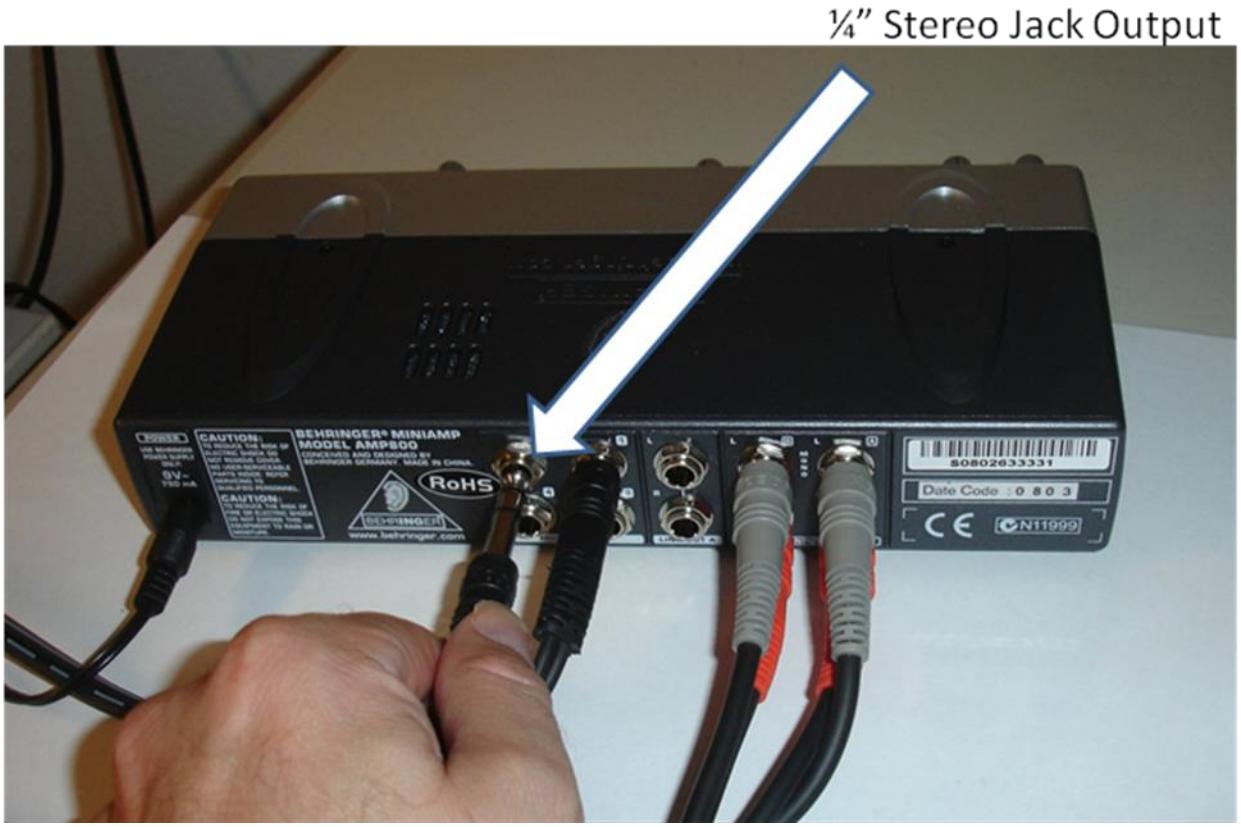

Figure 5 – Connecting to the Audio Receiving Device

Step 6

Adjust the gain of the B amplifier to match the expected line level of the audio receiving device. 1 Vrms will have the -12dB LED on solid and the -6dB LED blinking infrequently. 2 Vrms will have the -6dB LED on solid and 0dB LED blinking infrequently. See Figure 6.

Figure 7 shows the entire set of connections between the Audio Mojo and the pre-Amp.

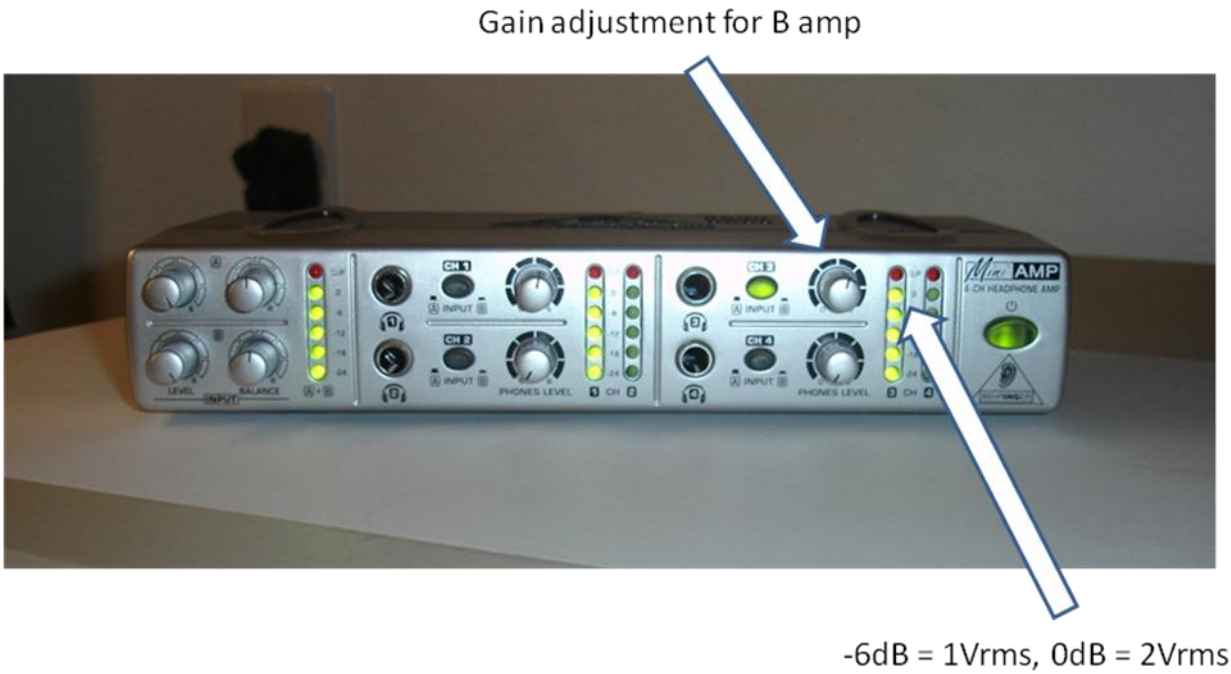

Figure 6 – Adjusting the gain of the output channel to the Audio Receiving Device

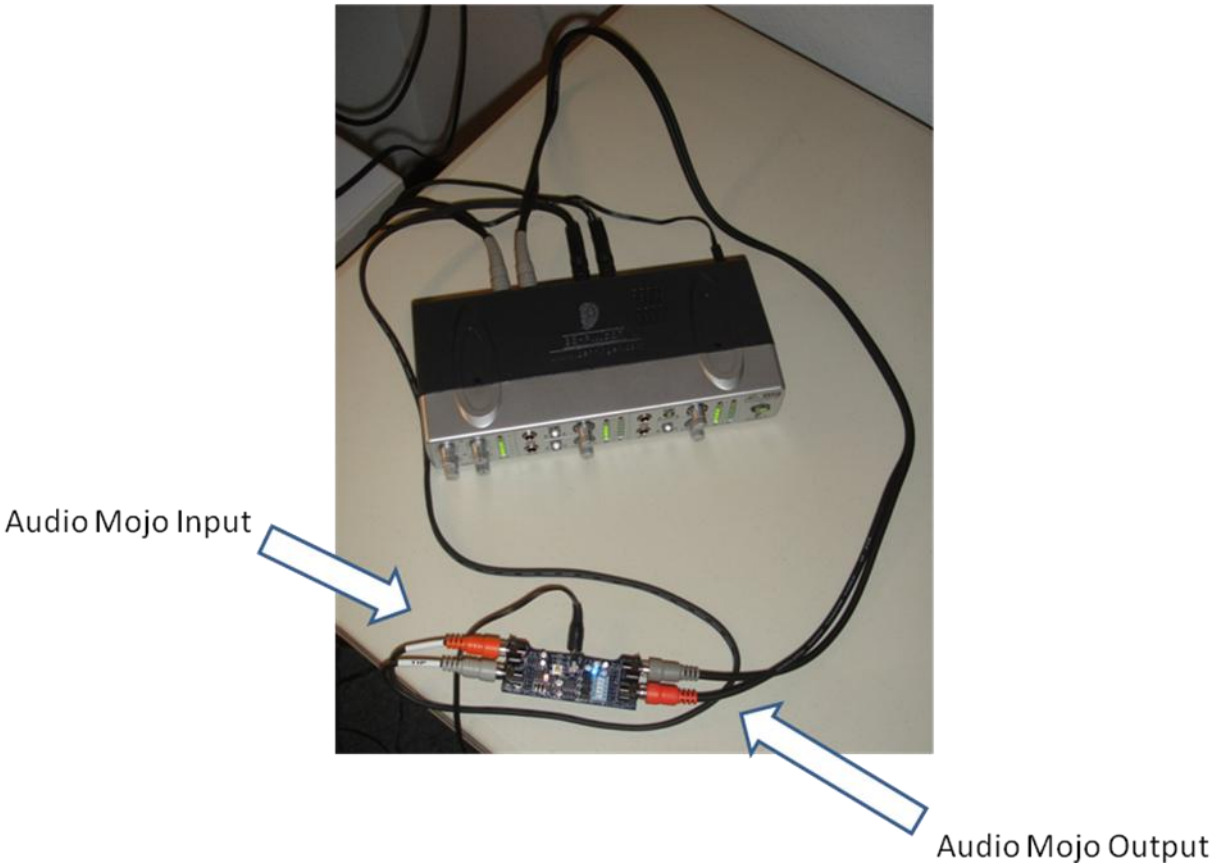

Figure 7 – Completed connections to Audio Mojo

5) Summary

When using the Audio Mojo to perform live listening tests, the user must be careful to assure that line levels for the input and output are matched. This is an artifact of the Audio Mojo board design and not an artifact of the SavFIRe digital filters that are under evaluation. The Audio Mojo board was designed as a general purpose audio interface and as such must be adjusted to the audio environment in which it is being used. This application note describes a method to ensure that the Audio Mojo receives the appropriate input levels and that the output of the Audio Mojo gives the audio receiver the levels it is expecting. In the user's system design, these levels are ensured through proper Codec design practices specific to the end equipment.

Contact Information:

Quickfilter Technologies, Inc.
1024 S. Greenville Avenue, Suite 100
Allen, TX 75002-3324

General: info@quickfilter.net
Applications: apps@quickfilter.net
Sales: sales@quickfilter.net
Phone: 214-547-0460
Fax: 214-547-0481
Web: www.quickfiltertech.com

The contents of this document are provided in connection with Quickfilter Technologies, Inc. products. Quickfilter makes no representations or warranties with respect to the accuracy or completeness of the contents of this publication and reserves the right to make changes to specifications and product descriptions at any time without notice. No license, whether express, implied, arising by estoppel or otherwise, to any intellectual property rights is granted by this publication. Except as set forth in Quickfilter's Standard Terms and Conditions of Sale, Quickfilter assumes no liability whatsoever, and disclaims any express or implied warranty, relating to its products including, but not limited to, the implied warranty of merchantability, fitness for a particular purpose, or infringement of any intellectual property right.
Quickfilter's products are not designed, intended, authorized or warranted for use as components in systems intended for surgical implant into the body, or in other applications intended to support or sustain life, or in any other application in which the failure of Quickfilter's product could create a situation where personal injury, death, or severe property or environmental damage may occur. Quickfilter reserves the right to discontinue or make changes to its products at any time without notice.

© 2006 Quickfilter Technologies, Inc.
All rights reserved.

Quickfilter, the Quickfilter logo and combinations thereof, are trademarks of Quickfilter Technologies, Inc.
Other product names used in this publication are for identification purposes only and may be trademarks of their respective companies.